UP/UFL Setscrew/Eccentric locking,Pillow block/2-Bolt flange



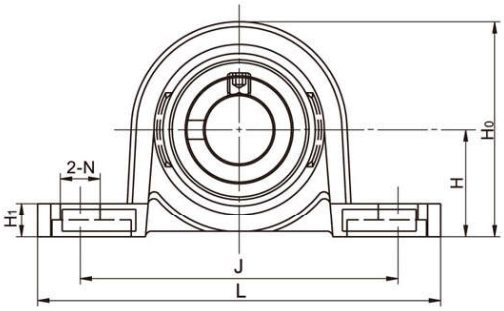

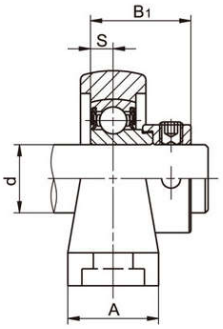

UP000 Series

Unit No.	Shaft d(mm)	Dimensions(mm)									Bolt Size mm	Bearing No.	Housing No.	Weight (kg)
		H	L	J	A	H1	H0	N	S	B1				
UP000	10	18	67	53	16	6	35	7	4	17.7	M6	U000	P000	0.08
UP001	12	19	71	56	16	6	38	7	4	17.7	M6	U001	P001	0.10
UP002	15	22	80	63	16	7	43	7	4.5	18.7	M6	U002	P002	0.14
UP003	17	24	85	67	18	7	47	7	5	20.7	M6	U003	P003	0.17
UP004	20	28	100	80	20	9	55	10	6	24.2	M8	U004	P004	0.26
UP005	25	32	112	90	20	10	62	10	6	25	M8	U005	P005	0.33
UP006	30	36	132	106	26	11	70	13	6.5	26	M10	U006	P006	0.50



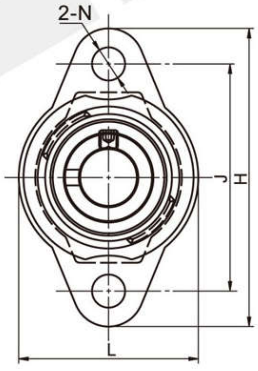

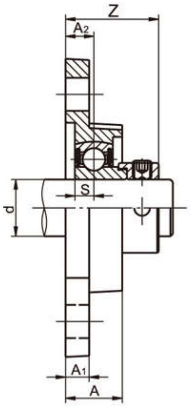

UFL000 Series

Unit No.	Shaft d(mm)	Dimensions(mm)									Bolt Size mm	Bearing No.	Housing No.	Weight (kg)
		H	J	A2	A1	A	N	L	S	z				
UFL000	10	60	45	6	6	12	7	36	4	19.7	M6	U000	FL000	0.07
UFL001	12	63	48	6	6	12	7	38	4	19.7	M6	U001	FL001	0.08
UFL002	15	67	53	6.5	6.5	13	7	42	4.5	20.7	M6	U002	FL002	0.11
UFL003	17	71	56	7	7	14	7	46	5	22.7	M6	U003	FL003	0.14
UFL004	20	90	71	8	8	16	10	55	6	26.2	M8	U004	FL004	0.23
UFL005	25	95	75	8	8	16	10	60	6	27	M8	U005	FL005	0.27
UFL006	30	112	85	9	9	18	13	70	6.5	28.5	M10	U006	FL006	0.39