UCFLX Medium duty,Wider inner ring bearing, Setscrew locking



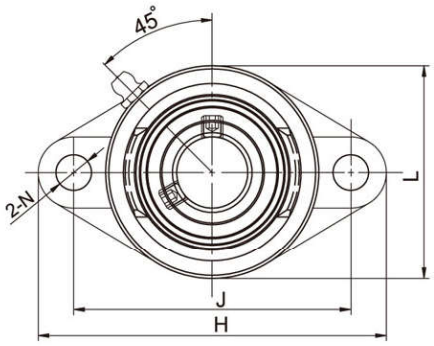

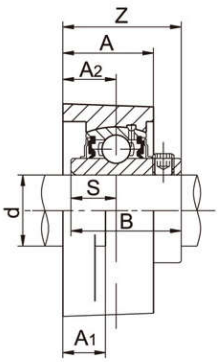

Unit No.	Shaft Dia d (in)	Shaft Dia d (mm)	H	J	A2	A1	A	N	L	B	S	Z	Bolt Size (mm)	Bolt Size (in)	Weight (kg)
UCFLX05		25													
05-13	13/16														
05-14	7/8		141	117	18	13	30	12	83	38.1	15.9	40.2	M14	3/8	1.0
05-15	15/16														
05-16	1														
UCFLX06		30													
06-17	1-1/16														
06-18	1-1/8		156	130	19	15	34	16	95	42.9	17.5	44.4	M14	1/2	1.5
06-19	1-3/16														
06-20	1-1/4														
UCFLX07		35													
07-21	1-5/16														
07-22	1-3/8		171	144	21	16	38	16	105	49.2	19	51.2	M14	1/2	2.0
07-23	1-7/16														
UCFLX08															
08-24	1-1/2	40	179	148	22	16	40	16	111	49.2	19	52.2	M14	1/2	2.2
08-25	1-9/16														
UCFLX09															
09-26	1-5/8														
09-27	1-11/16	45	189	157	23	16	40	16	116	51.6	19	55.6	M16	1/2	2.4
09-28	1-3/4														
09-29	1-13/16														
UCFLX10															
10-30	1-7/8	50	216	184	26	18	44	19	133	55.6	22.2	59.4	M16	5/8	3.4
10-31	1-15/16														
10-32	2														