LDK® Pillow Blocks

UKP+H Standard duty,Tapered bore,Adapter sleeve locking



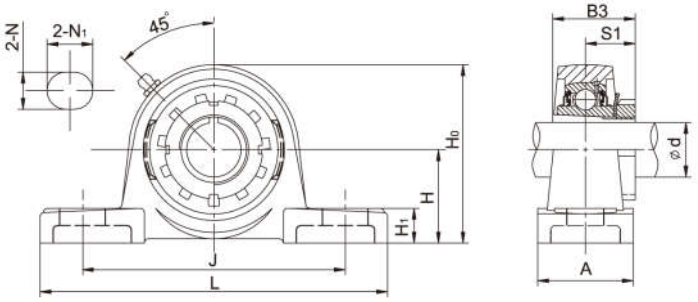

Unit No.	Shaft Dia d		Dimensions (mm)										Bolt Size (mm)	Weight (kg)
	(in)	(mm)	H	L	J	A	N	N1	H1	H0	B3	S1		
UKP205+H2305		20	36.5	140	105	38	13	19	15	71	35	18.5	M10	0.83
205+HE2305	3/4													
UKP206+H2306		25	42.9	160	121	44	17	21	16	82	38	20.5	M14	1.3
206+HS2306	7/8													
206+HA2306	15/16													
206+HE2306	1													
UKP207+H2307		30	47.6	167	126	48	17	21	17	92	43	22.5	M14	1.5
207+HE2307	1-1/8													
207+HS2307	1-3/16													
UKP208+H2308		35	49.2	180	137	53	17	21	18	99	46	24.5	M14	2.0
208+HE2308	1-1/4													
208+HS2308	1-3/8													
UKP209+H2309		40	54	190	146	54	17	21	20	106	50	26	M14	2.3
209+HA2309	1-7/16													
209+HE2309	1-1/2													
UKP210+H2310		45	57.2	206	159	60	20	25	21	114	55	27.5	M16	3.0
210+HS2310	1-5/8													
210+HA2310	1-11/16													
210+HE2310	1-3/4													
UKP211+H2311		50	63.5	217	172	60	20	25	23	125	59	28.5	M16	3.5
211+HS2311	1-7/8													
211+HA2311	1-15/16													
211+HE2311	2													
UKP212+H2312		55	69.9	238	186	70	20	25	25	137	62	31	M16	4.7
212+HS2312	2-1/8													
UKP213+H2313		60	76.2	262	203	70	25	30	26	149	65	32	M20	5.9
213+HA2313	2-3/16													
213+HE2313	2-1/4													
213+HS2313	2-3/8													
UKP215+H2315		65	82.6	274	217	74	25	30	28	162	73	35.5	M20	7.6
215+HA2315	2-7/16													
215+HE2315	2-1/2													
UKP216+H2316		70	88.9	292	232	78	25	30	30	174	78	39	M20	9.2
216+HA2316	2-11/16													
216+HE2316	2-3/4													
UKP217+H2317		75	95.2	310	247	83	25	28	32	186	82	40	M20	10.93
UKP218+H2318		80	101.6	326	262	88	27	30	33	198	86	42	M22	12.65

Notes:1.Grease fittings avaiable at 90° positions.
2.Bearing housing solid base optional,add suffix SB as designation.