Tapped Base Pillow BLocks

LDK®

UCPW Standard duty,Wider inner ring bearing,Setscrew locking



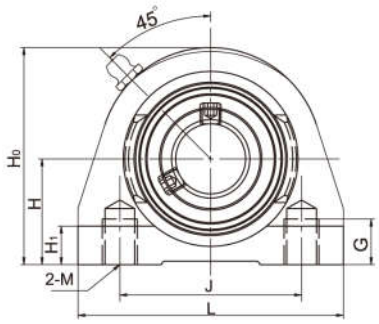

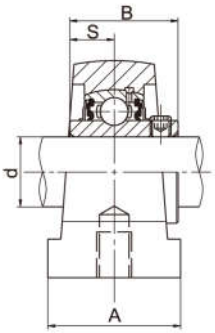

Unit No.	Shaft Dia d		Dimensions (mm)										Bolt Size (mm)	Weight (kg)
	(in)	(mm)	H	L	J	A	M	G	H_0	H_1	B	S		
UCPW201		12	33.3	65	50.8	32	M8	13	64	13	31	12.7	M8	0.8
201-8	1/2													
UCPW202		15	33.3	65	50.8	32	M8	13	64	13	31	12.7	M8	0.79
202-9	9/16													
202-10	5/8													
UCPW203		17	33.3	65	50.8	32	M8	13	64	13	31	12.7	M8	0.77
203-11	11/16													
UCPW204		20	33.3	65	50.8	32	M8	13	64	13	31	12.7	M8	0.76
204-12	3/4													
UCPW205		25	36.5	70	50.8	36	M10	13	70	13	34.1	14.3	M10	0.91
205-14	7/8													
205-15	15/16													
205-16	1													
UCPW206		30	42.9	98	76.2	38	M10	16	82	15	38.1	15.9	M10	1.42
206-17	1-1/16													
206-18	1-1/8													
206-19	1-3/16													
206-20	1-1/4													
UCPW207		35	47.6	103	82.6	45	M10	19	93	15	42.9	17.5	M10	1.91
207-20	1-1/4													
207-21	1-5/16													
207-22	1-3/8													
207-23	1-7/16													
UCPW208		40	49.2	116	88.9	48	M12	19	99	15	49.2	19	M12	2.28
208-24	1-1/2													
208-25	1-9/16													
UCPW209		45	53.9	120	95.3	48	M12	19	107	18	49.2	19	M12	2.61
209-26	1-5/8													
209-27	1-11/16													
209-28	1-3/4													
UCPW210		50	57.2	135	101.6	54	M16	22	115	18	51.6	19	M16	3.28
210-30	1-7/8													
210-31	1-15/16													
210-32	2													

http://www.ldk-bearings.com