SK/SU Stainless steel,Setscrew/Eccentric locking



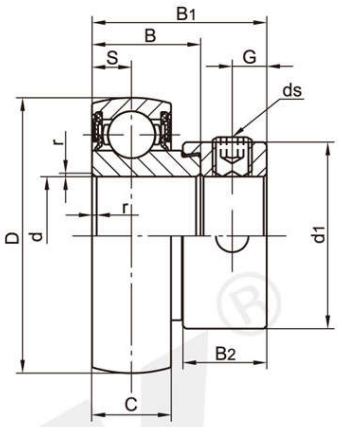

SU000 Series

Bearing No.	Shaft d(mm)	Dimensions(mm)										Basic Load Rating kgf		Weight (kg)
		D	B	C	S	B1	B2	d1	r	G	ds	Dynamic Cr	Static Cor	
SU 000	10	26	11	8	4	17.5	8.5	17	0.7	3.5	M4X0.7	4.60	1.96	0.03
SU 001	12	28	11	8	4	17.5	8.5	19	0.7	3.5	M4X0.7	5.09	2.4	0.03
SU 002	15	32	12	9	4.5	18.5	8.5	22	0.7	3.5	M4X0.7	5.58	2.84	0.04
SU 003	17	35	13.5	10	5	20.5	9.5	25	0.8	3.5	M4X0.7	5.97	3.28	0.06
SU 004	20	42	16.5	12	6	24.5	11	30	1.3	3.8	M5X0.8	9.35	5.04	0.1
SU 005	25	47	17.5	12	6	25.5	12	36	1.3	4	M5X0.8	10.09	5.83	0.12
SU 006	30	55	18.5	13	6.5	26.5	12	42	1.5	4	M5X0.8	13.23	8.28	0.17



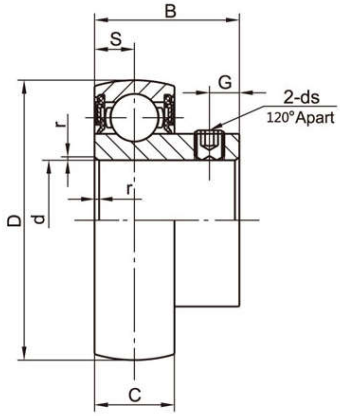

SK000 Series

Bearing No.	Shaft d(mm)	Dimensions(mm)							Basic Load Rating kgf		Weight (kg)
		D	B	C	S	r	G	ds	Dynamic Cr	Static Cor	
SK 000	10	26	14	8	4	0.7	3	M3x0.5	4.6	1.96	0.02
SK 001	12	28	14.5	8	4	0.7	3	M3x0.5	5.09	2.4	0.03
SK 002	15	32	16.5	9	4.5	0.7	3.5	M4X0.7	5.58	2.84	0.04
SK 003	17	35	17.5	10	5	0.8	3.5	M4X0.7	5.97	3.28	0.05
SK 004	20	42	21	12	6	1.3	4	M5X0.8	9.35	5.04	0.08
SK 005	25	47	22.5	12	6	1.3	4.5	M5X0.8	10.09	5.83	0.10
SK 006	30	55	24.5	13	6.5	1.5	5	M5X0.8	13.23	8.28	0.15