UCST Standard duty,Wider inner ring bearing,Wider slot housing,Setscrew locking



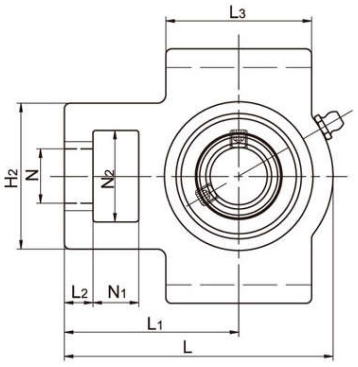

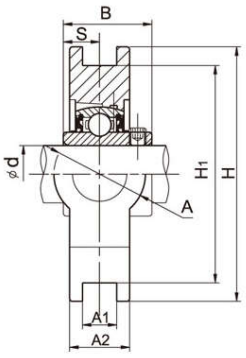

Unit No.	Shaft Dia d		Dimensions (mm)															Weight (kg)
	(in)	(mm)	N_1	L_2	H_2	N_2	N	L_3	A_1	H_1	H	L	A	A_2	L_1	B	S	
UCST201		12	16	10	51	32	19	51	13.5	76	89	94	32	21	61	31	12.7	0.8
201-8	1/2																	
202		15																
202-10	5/8																	
203		17																
203-11	11/16																	
204		20																
204-12	3/4																	
UCST205		25	16	10	51	32	19	51	13.5	76	89	97	32	24	62	34.1	14.3	0.8
205-14	7/8																	
205-15	15/16																	
205-16	1																	
UCST206		30	16	10	56	37	22	57	13.5	89	102	113	37	28	70	38.1	15.9	1.26
206-17	1-1/16																	
206-18	1-1/8																	
206-19	1-3/16																	
206-20	1-1/4																	
UCST207		35	16	13	64	37	22	64	13.5	89	102	129	37	30	78	42.9	17.5	1.68
207-20	1-1/4																	
207-21	1-5/16																	
207-22	1-3/8																	
207-23	1-7/16																	
UCST208		40	19	16	83	49	29	83	17.5	102	114	144	49	33	88	49.2	19	2.28
208-24	1-1/2																	
208-25	1-9/16																	
UCST209		45	19	16	83	49	29	83	17.5	102	117	144	49	35	87	49.2	19	2.52
209-26	1-5/8																	
209-27	1-11/16																	
209-28	1-3/4																	
UCST210		50	19	16	83	49	29	86	17.5	102	117	149	49	37	90	51.6	19	2.75
210-30	1-7/8																	
210-31	1-15/16																	
210-32	2																	
UCST211		55	25	19	102	64	35	95	27	130	146	171	64	38	106	55.6	22.2	4.1
211-32	2																	
211-34	2-1/8																	
211-35	2-3/16																	
UCST212		60	32	19	102	64	35	102	27	130	146	194	64	42	119	65.1	25.4	4.9
212-36	2-1/4																	
212-38	2-3/8																	
212-39	2-7/16																	