LDK® Tapped Base Pillow BLocks

UCPG Standard duty,Wider inner ring bearing,Setscrew locking



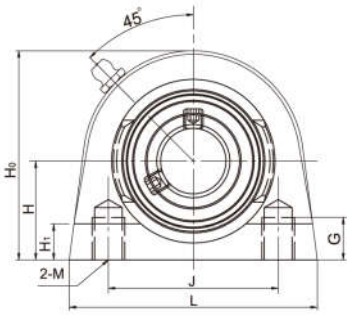

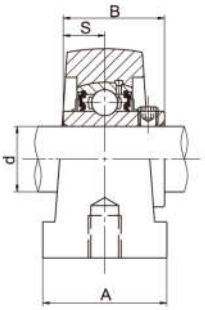

Unit No.	Shaft Dia d		Dimensions (mm)										Bolt Size (mm)	Weight (kg)
	(in)	(mm)	H	L	J	A	M	G	H_1	H_0	B	S		
UCPG201		12	33.3	70	49	38	M8	14	11	64	31	12.7	M8	0.8
201-8	1/2													
UCPG202		15	33.3	70	49	38	M8	14	11	64	31	12.7	M8	0.79
UCPG202-9	9/16													
UCPG202-10	5/8													
UCPG203		17	33.3	70	49	38	M8	14	11	64	31	12.7	M8	0.77
UCPG203-11	11/16													
UCPG204		20	33.3	70	49	38	M8	14	11	64	31	12.7	M8	0.76
UCPG204-12	3/4													
UCPG205		25	36.5	75	50	38	M10	15	13	70	34.1	14.3	M10	0.91
UCPG205-14	7/8													
UCPG205-15	15/16													
UCPG205-16	1													
UCPG206		30	42.9	85	60	48	M10	17	13	84	38.1	15.9	M10	1.42
UCPG206-17	1-1/16													
UCPG206-18	1-1/8													
UCPG206-19	1-3/16													
UCPG206-20	1-1/4													
UCPG207		35	47.6	100	68	48	M12	17	13	93	42.9	17.5	M12	1.91
UCPG207-20	1-1/4													
UCPG207-21	1-5/16													
UCPG207-22	1-3/8													
UCPG207-23	1-7/16													
UCPG208		40	49.2	110	78	54	M12	20	14	98	49.2	19	M12	2.28
UCPG208-24	1-1/2													
UCPG208-25	1-9/16													
UCPG209		45	53.9	120	85	54	M12	20	14	106	49.2	19	M12	2.61
UCPG209-26	1-5/8													
UCPG209-27	1-11/16													
UCPG209-28	1-3/4													
UCPG210		50	57.2	135	95	60	M16	21	14	114	51.6	19	M16	3.28
UCPG210-30	1-7/8													
UCPG210-31	1-15/16													
UCPG210-32	2													