UCC Standard duty,Wider inner ring bearing,Setscrew locking



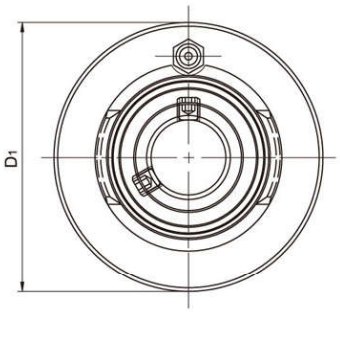

Unit No.	Shaft Dia d (in)	Shaft Dia d (mm)	Dimensions(mm) D1	A	B	S	Weight (kg)
UCC201		12	67	20	27.4	11.5	0.56
201-8	1/2						
UCC202		15	67	20	27.4	11.5	0.52
202-9	9/16						
202-10	5/8						
UCC203		17	67	20	27.4	11.5	0.51
203-11	11/16						
UCC204		20	72	20	31.0	12.7	0.49
204-12	3/4						
UCC205		25	80	22	34.1	14.3	0.65
205-14	7/8						
205-15	15/16						
205-16	1						
UCC206		30	85	27	38.1	15.9	0.82
206-17	1-11/16						
206-18	1-1/8						
206-19	1-3/16						
206-20	1-1/4						
UCC207		35	90	28	42.9	17.5	0.93
207-20	1-1/4						
207-21	1-5/16						
207-22	1-3/8						
207-23	1-7/16						
UCC208		40	100	30	49.2	19.0	1.25
208-24	1-1/2						
208-25	1-9/16						
UCC209		45	110	31	49.2	19.0	1.53
209-26	1-5/8						
209-27	1-11/16						
209-28	1-3/4						
UCC210		50	120	33	51.6	19.0	1.93
210-30	1-7/8						
210-31	1-15/16						
210-32	2						
UCC211		55	125	35	55.6	22.2	2.14
211-32	2						
211-34	2-1/8						
211-35	2-3/16						
UCC212		60	130	38	65.1	25.4	2.52
212-36	2-1/4						
212-38	2-3/8						
212-39	2-7/16						
UCC213		65	140	40	65.1	25.4	2.97
213-40	2-1/2						

LDK®