LDK® 4-Bolt Flange Units

UKF+H Standard duty,Tapered bore,Adapter sleeve locking



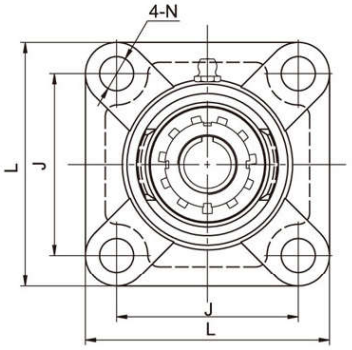

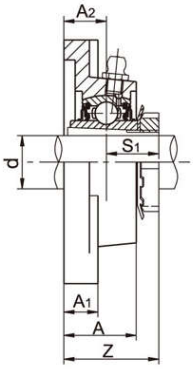

Unit No.	Shaft Dia d (in)	Shaft Dia d (mm)	L	J	A2	A1	A	N	S1	Z	Bolt Size (mm)	Weight (kg)
UKF205+H2305		20	95	70	16	14	27	12	18.5	34.5	M10	0.84
205+HE2305	3/4											
UKF206+H2306		25	108	83	18	14	31	12	20.5	38.5	M10	1.1
206+HS2306	7/8											
206+HA2306	15/16											
206+HE2306	1											
UKF207+H2307		30	117	92	19	16	34	14	22.5	41.5	M12	1.6
207+HS2307	1-1/8											
207+HA2307	1-3/16											
UKF208+H2308		35	130	102	21	16	36	16	24.5	45.5	M14	1.9
208+HE2308	1-1/4											
208+HS2308	1-3/8											
UKF209+H2309		40	137	105	22	18	38	16	26	48	M14	2.3
209+HA2309	1-7/16											
209+HE2309	1-1/2											
UKF210+H2310		45	143	111	22	18	40	16	27.5	49.5	M14	2.6
210+HS2310	1-5/8											
210+HA2310	1-11/16											
210+HE2310	1-3/4											
UKF211+H2311		50	162	130	25	20	43	19	28.5	53.5	M16	3.4
211+HS2311	1-7/8											
211+HA2311	1-15/16											
211+HE2311	2											
UKF212+H2312		55	175	143	29	20	48	19	31	60	M16	4.1
212+HS2312	2-1/8											
UKF213+H2313		60	187	149	30	22	50	19	32	62	M16	5.5
213+HA2313	2-3/16											
213+HE2313	2-1/4											
213+HS2313	2-3/8											
UKF215+H2315		65	200	159	34	22	56	19	35.5	69.5	M16	6.7
215+HA2315	2-7/16											
215+HE2315	2-1/2											
UKF216+H2316		70	208	165	34	22	58	23	39	73	M20	7.5
216+HA2316	2-11/16											
216+HE2316	2-3/4											
UKF217+H2317		75	220	175	36	24	63	23	40	76	M20	9.1
217+HA2317	2-15/16											
217+HE2317	3											
UKF218+H2318		80	235	187	40	25	68	23	42	82	M20	11.8

Notes:Bearing housing solid base optional,add suffix SB as designation.