UCFS300 Heavy duty,Pilot on the back of housing,Wider inner ring bearing,Setscrew locking



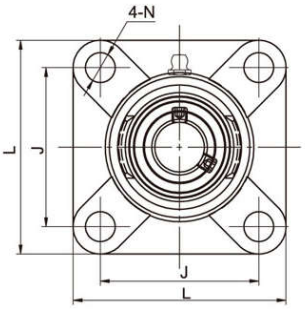

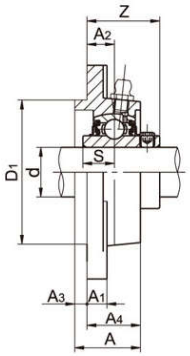

Unit No.	Shaft Dia d (in)	Shaft Dia d (mm)	L	J	A2	A1	A	H	H1	N	D1	S	Z	Bolt Size (mm)	Weight (kg)
UCFS 305		25	110	80	9	22	29	7	13	16	80	15	32	M14	1.3
305-14	7/8														
305-15	15/16														
305-16	1														
UCFS 306		30	125	95	10	24	32	8	15	16	90	17	36	M14	1.9
306-18	1-1/8														
306-19	1-3/16														
UCFS 307		35	135	100	11	27	36	9	16	19	100	19	40	M16	2.4
307-20	1-1/4														
307-21	1-5/16														
307-22	1-3/8														
UCFS 308		40	150	112	13	30	40	10	17	19	115	19	46	M16	3.3
308-24	1-7/8														
308-25	1-15/16														
UCFS 309		45	160	125	14	33	44	11	18	19	125	22	49	M16	4.0
309-26	2														
309-27	2-1/8														
309-28	2-3/16														
UCFS 310		50	175	132	16	36	48	12	19	23	140	22	55	M20	5.3
310-30	1-7/8														
310-31	1-15/16														
UCFS 311		55	185	140	17	39	52	13	20	23	150	25	58	M20	6.2
311-32	2														
311-34	2-1/8														
311-36	2-3/16														
UCFS 312		60	195	150	19	42	56	14	22	23	160	26	64	M20	7.2
312-36	2-1/4														
312-38	2-3/8														
312-39	2-7/16														
UCFS 313		65	208	166	15	40	58	18	22	23	175	30	60	M20	8.9
313-40	2-1/2														
UCFS 314		70	226	178	18	43	61	18	25	25	185	31	65	M22	11
314-44	2-3/4														
UCFS 315		75	236	184	21	48	66	18	25	25	200	32	71	M22	13
315-48	3														
UCFS 316		80	250	196	18	48	68	20	27	31	210	34	70	M27	15
UCFS 317		85	260	204	24	54	74	20	27	31	220	40	80	M27	17
317-52	3-1/4														
UCFS 318		90	280	216	24	56	76	20	30	35	240	40	80	M30	21
318-56	3-1/2														
UCFS 319		95	290	228	39	74	94	20	30	35	250	41	101	M30	25
319-60	3-3/4														
UCFS 320		100	310	242	39	74	94	20	32	38	260	42	105	M33	30
320-64	4														
UCFS 322		100	340	266	35	71	96	25	35	41	300	46	106	M36	39
UCFS 324		120	370	290	35	80	110	30	40	41	330	51	110	M36	54
UCFS 326		130	410	320	35	85	115	30	45	41	360	54	116	M36	71
UCFS 328		140	450	350	45	95	125	30	55	41	400	59	131	M36	100