LDK® Corrosion Resistant Bearing Inserts

SNA Standard duty, Stainless steel,Wider inner ring,Eccentric locking, Factory-Lubed with food grade grease and with silicon rubber seal.



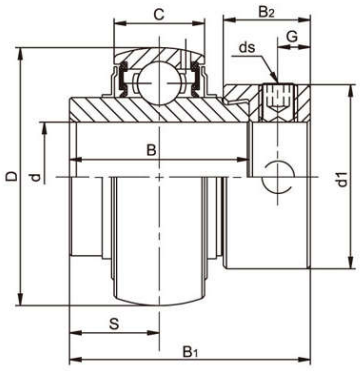

SNA200

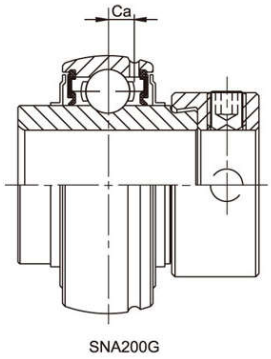

SNA200G



Bearing No.	Shaft Dia d		Dimensions(mm)										Load rating (KN)		Weight (kg)
	(in)	(mm)	D	B	C	S	B1	B2	d1	G	ds (mm)	ds (in.UNF)	Ca	Dynamic Cr	Static Cor	
SNA204		20	47	34.2	17	17.1	43.7	13.5	33.3	5	M6x1	1/4-28	4.3	12.82	6.65	0.21
204-12	3/4															
SNA205		25	52	34.9	17	17.5	44.4	13.5	38.1	5	M6x1	1/4-28	4.2	14.03	8.05	0.25
205-13	13/16															
205-14	7/8															
205-15	15/16															
205-16	1															
SNA206		30	62	36.5	19	18.3	48.4	15.9	44.5	6	M6x1	1/4-28	5.3	19.47	11.43	0.39
206-17	1-1/16															
206-18	1-1/8															
206-19	1-3/16															
206-20	1-1/4															
SNA207		35	72	37.6	20	18.8	51.1	17.5	55.6	6.5	M8x1	5/16-24	5.8	25.69	15.55	0.6
207-20	1-1/4															
207-21	1-5/16															
207-22	1-3/8															
207-23	1-7/16															
SNA208		40	80	42.8	21	21.4	56.3	18.3	60.3	6.5	M8x1	5/16-24	6.2	29.51	18.14	0.77
208-24	1-1/2															
208-25	1-9/16															
SNA209		45	85	42.8	22	21.4	56.3	18.3	63.5	6.5	M8x1	5/16-24	6.5	31.85	20.80	0.84
209-26	1-5/8															
209-27	1-11/16															
209-28	1-3/4															
SNA210		50	90	49.2	24	24.6	62.7	18.3	69.9	6.5	M8x1	5/16-24	7	34.99	23.70	1.02
210-30	1-7/8															
210-31	1-15/16															
210-32	2															
SNA211		55	100	55.5	25	27.8	71.4	20.7	76.2	8	M10x1.25	3/8-24	7.4	43.34	29.39	1.37
211-32	2															
211-33	2-1/16															
211-34	2-1/8															
211-35	2-3/16															
SNA212		60	110	61.9	27	31	77.8	22.3	84.2	8	M10x1.25	3/8-24	7.6	47.68	33.43	1.85
212-36	2-1/4															
212-37	2-5/16															
212-38	2-3/8															
212-39	2-7/16															