LDK® Adapter Sleeves

MB AL/MS ALL/MS Series Lock washer and Lock nuts



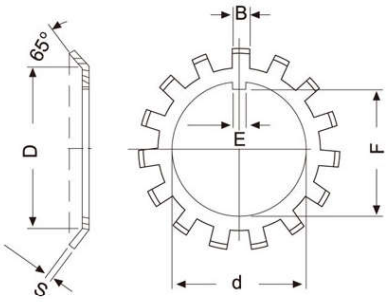

Series: MB

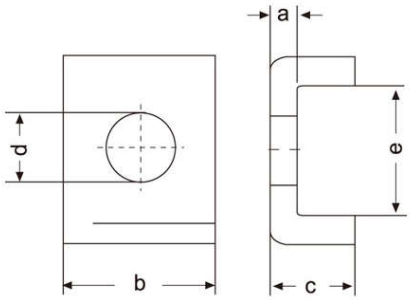

Series: AL/MS ALL/MS

Lock Washer

Item No.	d2	D	S	E	F	B	Weight (100pcs/kg)
MB0	10	13.5	1	3	8.5	3	0.131
MB1	12	17	1	3	10.5	3	0.192
MB2	15	21	1	4	13.5	4	0.253
MB3	17	24	1	4	15.5	4	0.313
MB4	20	26	1	4	18.5	4	0.350
MB5	25	32	1.25	5	23	5	0.640
MB6	30	38	1.25	5	27.5	5	0.780
MB7	35	44	1.25	6	32.5	5	1.04
MB8	40	50	1.25	6	37.5	6	1.23
MB9	45	56	1.25	6	42.5	6	1.52
MB10	50	61	1.25	6	47.5	6	1.60
MB11	55	67	1.25	8	52.5	7	1.96
MB12	60	73	1.5	8	57.5	7	2.53
MB13	65	79	1.5	8	62.5	7	2.90
MB14	70	85	1.5	8	66.5	8	3.34
MB15	75	90	1.5	8	71.5	8	3.56
MB16	80	95	1.75	10	76.5	8	4.64
MB17	85	102	1.75	10	81.5	8	5.24
MB18	90	108	1.75	10	86.5	10	6.23
MB19	95	113	1.75	10	91.5	10	6.70
MB20	100	120	1.75	12	96.5	10	7.65
MB21	105	126	1.75	12	100.5	12	8.26
MB22	110	133	1.75	12	105.5	12	9.40
MB23	115	137	2	12	110.5	12	10.8
MB24	120	138	2	14	115	12	10.5
MB25	125	148	2	14	120	12	11.8
MB26	130	149	2	14	125	12	11.3
MB27	135	160	2	14	130	14	14.4
MB28	140	160	2	16	135	14	14.2
MB29	145	172	2	16	140	14	16.8
MB30	150	171	2	16	145	14	15.5
MB31	155	182	2.5	16	147.5	16	20.9
MB32	160	182	2.5	18	154	16	22.2
MB33	165	193	2.5	18	157.5	16	24.1
MB34	170	193	2.5	18	164	16	24.7
MB36	180	203	2.5	20	174	18	26.8
MB38	190	214	2.5	20	184	18	27.8
MB40	200	226	2.5	20	194	18	29.3
MB44	220	250	3	24	213	20	40.0
MB48	240	270	3	24	233	20	40.0
MB52	260	300	3	28	253	24	60.0
MB56	280	320	3	28	273	24	62.0

Lock Device

Item No.	a	b	c	d	e	Weight (100pcs/kg)
AL/MS3144	4	20	12	9	22.5	2.60
AL/MS3148	4	20	12	9	22.5	2.60
AL/MS3152	4	24	12	12	25.5	3.39
AL/MS3156	4	24	12	12	25.5	3.39
AL/MS3160	4	24	12	12	30.5	3.79
AL/MS3164	5	24	15	12	31	5.35
AL/MS3168	5	28	15	14	38	6.65
AL/MS3172	5	28	15	14	38	6.65
AL/MS3176	5	32	15	14	40	7.96
AL/MS3180	5	32	15	18	45	8.20
AL/MS3184	5	32	15	18	45	8.20
AL/MS3188	5	36	15	18	43	9.00
AL/MS3192	5	36	15	18	43	9.00
AL/MS3196	5	36	15	18	53	10.4
ALL/MS3044	4	20	12	7	13.5	2.12
ALL/MS3048	4	20	12	9	17.5	2.29
ALL/MS3052	4	20	12	9	17.5	2.29
ALL/MS3056	4	24	12	9	17.5	2.92
ALL/MS3060	4	24	12	9	20.5	3.16
ALL/MS3064	5	24	15	9	21	4.56
ALL/MS3068	5	24	15	9	21	4.56
ALL/MS3072	5	28	15	9	20	5.03
ALL/MS3076	5	28	15	12	24	5.28
ALL/MS3080	5	28	15	12	24	5.28
ALL/MS3084	5	32	15	12	24	6.11
ALL/MS3088	5	32	15	14	28	6.45
ALL/MS3092	5	32	15	14	28	6.45
ALL/MS3096	5	36	15	14	28	7.29

http://www.ldk-bearings.com