UK Standard duty, Tapered bore, Adapter sleeve locking



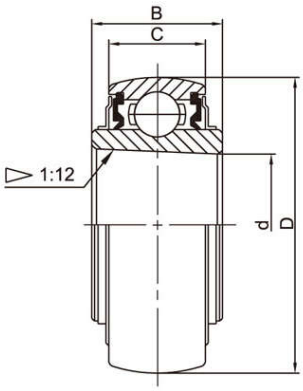

UK200

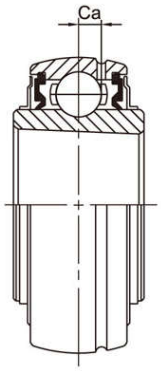

UK200G
Relubricatable type



Bearing No.	Dimensions(mm)						Basic Load Rating (KN)		Weight (kg)
	d1	d	D	B	C	Ca	Dynamic Cr	Static Cor	
UK205	20	25	52	23	17	4	14.03	8.05	0.21
UK206	25	30	62	26	19	5.3	19.47	11.43	0.31
UK207	30	35	72	28	20	5.8	25.69	15.55	0.46
UK208	35	40	80	29	21	6.2	29.51	18.14	0.63
UK209	40	45	85	30	22	6.5	31.85	20.80	0.68
UK210	45	50	90	32	24	7	34.99	23.70	0.78
UK211	50	55	100	36	25	7.4	43.34	29.39	1.07
UK212	55	60	110	38	27	7.6	47.68	33.43	1.51
UK213	60	65	120	40	28	8.5	57.20	40.01	1.86
UK215	65	75	130	43	30	9.2	62.08	44.82	2.21
UK216	70	80	140	45	33	9.5	72.62	53.34	2.79
UK217	75	85	150	46	35	11.1	83.15	64.54	3.38
UK218	80	90	160	47	37	11.8	95.84	72.64	4.46