TP-SUCPA Thermoplastic pillow blocks,Tapped base,Stainless steel inserts, With food grade grease and silicon rubber seal,Setscrew locking



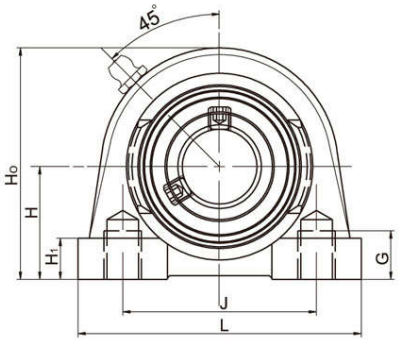

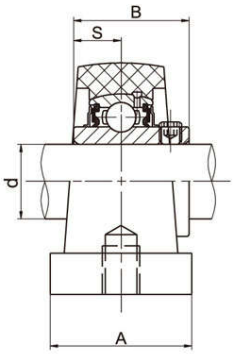

Unit No.	Shaft Dia d (in)	Shaft Dia d (mm)	H	L	J	A	H0	B	G	H1	S	Bolt Size (mm)	Weight (kg)
TP-SUCPA201		12	33.3	76	52	38	64	31	10	13	12.7	M8	0.26
201-8	1/2												
TP-SUCPA202		15	33.3	76	52	38	64	31	10	13	12.7	M8	0.26
202-9	9/16												
202-10	5/8												
TP-SUCPA203		17	33.3	76	52	38	64	31	10	13	12.7	M8	0.26
203-11	11/16												
TP-SUCPA204		20	33.3	76	52	38	64	31	10	13	12.7	M8	0.26
204-12	3/4												
TP-SUCPA205		25	36.5	84	56	38	72	34.1	12	14	14.3	M10	0.32
205-14	7/8												
205-15	15/16												
205-16	1												
TP-SUCPA206		30	42.9	95	66	48	84	38.1	12	16	15.9	M10	0.53
206-17	1-1/16												
206-18	1-1/8												
206-19	1-3/16												
206-20	1-1/4												
TP-SUCPA207		35	47.6	110	80	48	95	42.9	12	18	17.5	M10	0.73
207-20	1-1/4												
207-21	1-5/16												
207-22	1-3/8												
207-23	1-7/16												
TP-SUCPA208		40	49.2	116	84	54	100	49.2	15	18	19	M12	0.93
208-24	1-1/2												
208-25	1-9/16												
TP-SUCPA209		45	54.2	120	90	54	108	49.2	15	20	19	M12	1.06
209-26	1-5/8												
209-27	1-11/16												
209-28	1-3/4												
TP-SUCPA210		50	57.2	130	94	60	116	51.6	18	21	19	M16	1.25
210-30	1-7/8												
210-31	1-15/16												
210-32	2												

MODE OF LOAD	BREAKING POINT OF HOUSINGS(N) 204	205	206	207	208	209	210
P←→P	8210	8540	10370	12150	12230	12900	13850
P↑ ↓P	6900	7010	6580	8080	9100	10400	11050
P←↓P	2980	2850	4950	8160	9800	10710	11360

Notes:Anti-Bacteria Protection Series is available by adding prefix"AB" as designation.Ordering example:ABTP-SUCPA204