

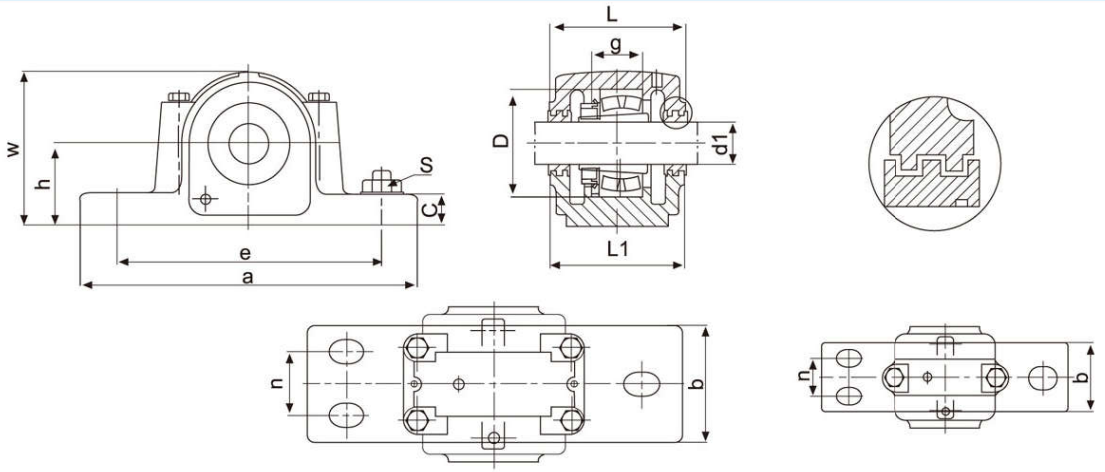

Housing No.	Shaft dia.	Dimensions (mm)														Housing Wt Kg	Bearing No	Adapter Sleeve	Locating Ring	
		D H8	g H12	h H12	w	L	L_1	a	b	c	e max	e min	n	S (2)	S (4)				Number	QTY
SAF505	3/4	52	25	38.1	75	70	73	165	45	18	139.7	118		M12		1.8	1205K 2205K	HA205 HA305	FR52x5 FR52x7	2 1
SAF506	15/16	62	30	44.5	86	78	83	191	51	18	155	133		M12		2.2	1206K 2206K	HA206 HA306	FR62x7 FR62x10	2 1
SAF507	1-3/16	72	33	50.8	97	81	83	191	51	21	156	143		M12		2.7	1207K 2207K	HA207 HA307	FR72x8 FR72x10	2 1
SAF509	1-7/16	85	31	57.2	111	87	92	210	61	21	178	159		M12		3.9	1209K 2209K 22209K	HA209 HA309 HA309	FR85x6 FR85x8 FR85x8	2 1 1
SAF510	1-11/16	90	33	63.5	121	87	99	210	61	24	178	165		M12		4.3	1210K 2210K 22210K	HA210 HA310 HA310	FR90x6.5 FR90x10 FR90x10	2 1 1
SAF511	1-15/16	100	33	69.9	133	95	114	245	70	24	200	188		M16		5	1211K 2211K 22211K	HA210 HA310 HA311	FR100x6 FR100x8 FR100x8	2 1 1
SAF513 FSAF513	2-3/16 2-3/16	120 120	41 41	76.2 76.2	151 151	108 108	114 114	279 279	80 80	25 25	241 241	206 206	50.8	M16	M12	7.7 7.7	1213K 2213K 22213K	HA213 HA313 HA313	FR120x9 FR120x10 FR120x10	2 1 1
SAF515 FSAF515	2-7/16 2-7/16	130 130	41 41	82.6 82.6	162 162	118 118	121 121	286 286	80 80	29 29	245 245	219 219	47.7	M16	M12	8.7 8.7	1215K 2215K 22215K	HA215 HA315 HA315	FR130x8 FR130x10 FR130x10	2 1 1
SAF516 FSAF516	2-11/16 2-11/16	140 140	43 43	88.9 88.9	175 175	121 121	124 124	330 330	89 89	30 30	279 279	245 245	54.1	M20	M16	11.6 11.6	1216K 2216K 22216K	HA216 HA316 HA316	FR140x8.5 FR140x10 FR140x10	2 1 1
SAF517 FSAF517	2-15/16 2-15/16	150 150	46 46	95.3 95.3	186 186	122 122	127 127	330 330	89 89	32 32	279 279	251 251	54.1	M20	M16	12.3 12.3	1217K 2217K 22217K	HA217 HA317 HA317	FR150x9 FR150x10 FR150x10	2 1 1
SAF518 FSAF518	3-3/16 3-3/16	160 160	50 50	101.6 101.6	197 197	140 140	146 146	349 349	99 99	33 33	295 295	264 264	54.1	M20	M16	15.4 15.4	1218K 2218K 22218K	HA218 HA318 HA318	FR160x10 FR160x10 FR160x10	2 1 1
SAF520 FSAF520	3-7/16 3-7/16	180 180	58 58	114.3 114.3	222 222	148 148	152 152	387 387	111 111	45 45	333 333	295 295	60.5	M24	M20	27.3 27.3	1220K 2220K 22220K	HA220 HA320 HA320	FR180x11 FR180x10 FR180x10	2 1 1
SAF522	3-15/16	200	63	125.4	245	164	165	419	121	51	368	321	69.9		M20	35	1222K 2222K 22222K	HA222 HA322 HA322	FR200x12.5 FR200x10 FR200x10	2 1 1
SAF524	4-3/16	215	68	133.4	260	181	188	419	121	54	368	337	69.9		M20	43.2	22224K	HA3124	FR215x10	1
SAF526	4-7/16	230	74	152.4	292	197	203	467	130	61	406	372	82.6		M24	58.6	22226K	HA3126	FR230x10	1
SAF528	4-15/16	250	78	152.4	298	187	194	511	149	61	435	406	85.9		M24	62	22228K	HA3128	FR250x10	1
SAF530	5-3/16	270	83	160.4	318	207	213	540	159	64	464	432	95.3		M24	76.8	22230K	HA3130	FR270x10	1
SAF532	5-7/16	290	90	169.9	338	216	222	559	159	67	489	442	95.3		M24	81.3	22232K	HA3132	FR290x10	1
SAF534	5-15/16	310	96	179.4	360	235	245	629	172	70	549	492	108		M24	104.5	22234K	HA3134	FR310x10	1
SAF536	6-7/16	320	96	190.5	378	245	254	680	181	76	600	530	117.6		M24	117.6	22236K	HA3136	FR320x10	1
SAF538	6-15/16	340	102	200	398	267	273	711	191	80	619	549	114.3		M30	135	22238K	HA3138	FR340x10	1
SAF540	7-3/16	360	108	209.6	419	279	286	749	203	86	635	572	127		M30	167.5	22240K	HA3140	FR360x10	1
SAF544	7-15/16	400	118	241.3	473	298	305	832	222	95	708	629	133.4		M30	230.2	22244K	HA3144	FR400x10	1