LDK® Stamped Steel Housed Units

SAPF200/SAPFT200 Light duty, Eccentric locking, 3-Bolt flange housing



SAPF200

SAPFT200

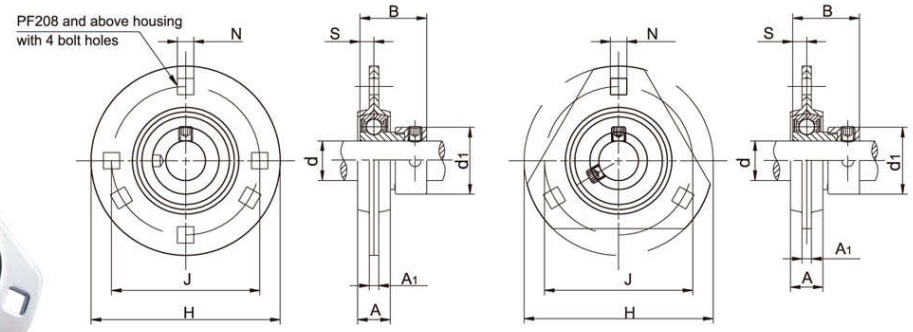

Unit No.		Shaft Dia d		Dimensions(mm)								Bolt Size		Weight (kg)
		(in)	(mm)	H	J	A	A_1	d_1	N	B_1	S	(mm)	(in)	
SAPF SAPFT	201		12	81	63.5	14	4	28.6	7	28.6	6	M6	1/4	0.24
	201-8	1/2												
	202		15											
	202-10	5/8												
	203		17											
	203-11	11/16												
	204		20	90	71	16	4	33.3	9	31	7	M8	5/16	0.35
	204-12	3/4												
	205		25	95	76	18	4	38.1	9	31.5	7.5	M8	5/16	0.42
	205-14	7/8												
	205-15	15/16												
	205-16	1												
	206		30	113	90	18	5	44.5	11	35.7	8	M10	3/8	0.59
	206-18	1-1/8												
	206-19	1-3/16												
	206-20	1-1/4												
	207		35	122	100	20	5	55.6	11	38.9	8.5	M10	3/8	0.9
	207-20	1-1/4												
	207-21	1-5/16												
	207-22	1-3/8												
	207-23	1-7/16												
	208		40	148	119	23	7	60.3	13.5	43.7	9	M12	1/2	1.11
	208-24	1-1/2												
	208-25	1-9/16												
	209		45	150	120.5	23	7	63.5	13.5	43.7	9.5	M12	1/2	1.48
	209-26	1-5/8												
	209-27	1-11/16												
	209-28	1-3/4												
	210		50	157	127	25	8	63.5	13.5	43.7	10	M12	1/2	1.66
	210-30	1-7/8												
	210-31	1-15/16												
	211		55	168	138	26	8	63.5	13.5	48.4	10.5	M12	1/2	2.0
	211-32	2												
	211-34	2-1/8												
	211-35	2-3/16												
	212		60	177	148	28	8	63.5	13.5	53.1	11	M12	1/2	2.1
	212-36	2-1/4												
	212-38	2-3/8												
	212-39	2-7/16												

PF208~212 with 4 bolt holes.